PCE

Connection
to the future

FLEX

Empty Enclosures for Low-Voltage Switchgear Assemblies

FLEX 6-E / 10-E / 16-E
FLEX 6-S3 / 10-S4 / 16-S6

User Manual EN

Translation of the original German user manual: 11206 FLEX BA V2.2 07.2026

© PC Electric Gesellschaft m.b.H.
This document is protected by copyright.
The contents of this document are the property of PC Electric Gesellschaft m.b.H. and may not be duplicated or reproduced without the written consent of the copyright holder.

We reserve the right to make changes in line with further technical development.
We accept no liability for the accuracy of this information.

Contents

1. General information 5
1.1 Using this user manual 5
1.2 Target group 5
1.3 Responsibility of the switchgear assembly manufacturer 5
1.4 Liability disclaimer 5
2. Safety information 6
2.1 Types of safety instruction 6
2.2 General safety instructions 6
2.3 Intended use 7
2.4 Reasonably foreseeable misuse 7
3. Conformity 8
3.1 Directives 8
3.2 Standards 8
3.3 Type label 8
4. Technical data 9
4.1 FLEX empty enclosure insulating material 10
4.2 Degrees of protection 10
4.3 Special operating conditions 10
4.4 Chemical compatibility 11
5. Product overview 12
5.1 Product description 12
5.2 Model overview 13
5.3 Dimensional sketch FLEX 6-E/6-S3 14
5.4 Dimensional sketch FLEX 10-E/10-S4 15
5.5 Dimensional sketch FLEX 16-E/16-S6 16
6. Package contents 17
7. Installation instructions 19
7.1 Drill openings for cable glands 19
7.2 Mount FLEX empty enclosure on wall 19
7.3 Fit hinge straps (2x) 21
7.4 Securely fasten enclose upper part and lower part 21
7.5 Fit blind flange (optional) 22

7.6 Fit CEE flanged socket (optional) 22
7.7 Fit socket outlet (DIN 49440) (optional) 22
8. Operation 23
8.1 Open hinged window 23
8.2 Close hinged window 23
8.3 Lock hinged window (optional) 23
8.4 Seal FLEX empty enclosure (optional) 24
8.5 Additional mounting options 24
9. Dismantling and disposal 25
10. Accessories (optional) 26

1. General information

1.1 Using this user manual

This user manual contains information necessary for proper installation and operation of the FLEX empty enclosure in all phases of the lifecycle. The safety-related information ensures safe and efficient handling of the FLEX empty enclosure for humans and the environment.
The user manual forms part of the FLEX empty enclosure package and must be carefully read and understood by all specialist personnel before starting any work.
The illustrations are provided for a better understanding and may differ from the supplied version.

1.2 Target group

This user manual is aimed at the qualified electricians of the switchgear assembly manufacturer.

1.3 Responsibility of the switchgear assembly manufacturer

The following specifications are binding for the switchgear assembly manufacturer.

The switchgear assembly manufacturer has sole responsibility for:

- Tasking only qualified electricians with work on the FLEX empty enclosure and ensuring that they are sufficiently qualified, trained and instructed
- Providing necessary documents for the qualified electricians
- Providing functional and personal protective equipment
- Compliance with country-specific guidelines, safety regulations and applicable product standards, and ensuring that all the processes and tests described therein are performed
- Proper equipotential bonding and protective earth integration of the installed switchgear
- Paying attention to proper use of the installed components, necessary tests and documentation

For the purpose of a better understanding, the manufacturer of the switchgear assembly is referred to simply as the manufacturer in the user manual.

1.4 Liability disclaimer

PC Electric GmbH accepts no liability for damage caused by:

- Failure to observe this user manual
- Improper use
- Use of non-qualified personnel
- Use of non-approved components from third-party providers

2. Safety information

2.1 Types of safety instruction

DANGER

Indicates an imminent danger. Failure to avoid this will result in serious injury or even death.

WARNING

Indicates a possible danger. Failure to avoid this may result in serious injury or even death.

CAUTION

Indicates a possible danger. Failure to avoid this may result in minor injury.

NOTICE

Information on a potentially harmful situation. Failure to avoid this may result in the equipment or something in the surrounding area being damaged.

Indicates important information.

2.2 General safety instructions

WARNING

Risk of electric shock from live equipment!
Take the following safety steps before starting any work:

- Disconnect mains
- Secure against being switched on again
- Determine absence of voltage
- Earth and short circuit
- Cover or cordon off nearby live parts

WARNING

Risk of electric shock from a damaged FLEX empty enclosure!
The original degree of protection is no longer assured due to damage to the FLEX empty enclosure.
- In the event of damage to the FLEX empty enclosure, deactivate the switchgear assembly immediately
- Use appropriate personal protective equipment

WARNING

Risk of injury due to improper use in a potentially explosive atmosphere! The FLEX empty enclosure is not designed for use in a potentially explosive atmosphere.
- Pay attention to using the FLEX empty enclosure as intended

NOTICE

To ensure the function and safety of the FLEX empty enclosure, it is advisable to use components and accessories from PC Electric GmbH.

The FLEX empty enclosure may only be processed by qualified electricians.

Always use appropriate and functional personal protective equipment.

2.3 Intended use

The FLEX empty enclosure is suitable for:

- Installation of protective equipment, electronic control units, plugs and sockets
- Production of low-voltage and switchgear assemblies in accordance with, e.g. standard series IEC/EN 61439
- Use under the defined operating conditions within the specified limits. See section "Technical data"

All specifications for installing the FLEX empty enclosure and the equipment must be observed. See section "Installation".

2.4 Reasonably foreseeable misuse

If the product is used outside the prescribed limits or handled in a manner other than that described in this user manual, the safety and properties of the product may be impaired.

Any other use of the product is considered to be improper.
PC Electric GmbH accepts no liability for any resulting injury or potential damage to the environment or property.

NOTICE

The FLEX empty enclosure is not suitable for use in a potentially explosive atmosphere.

3. Conformity

3.1 Directives

The FLEX empty enclosure complies with the requirements of the following European directives:

- Low-Voltage Directive 2014/35/EU
- RoHS 2011/65/EU and 2015/863/EU

3.2 Standards

The FLEX empty enclosure meets the requirements of standards IEC 62208 and EN IEC 62208.

3.3 Type label

The type label is located inside the FLEX empty enclosure. The type label contains the following information, as shown in the figure below.

This is an example and may differ from the supplied version. The correct specifications are depicted on the type label of each individual FLEX empty enclosure.

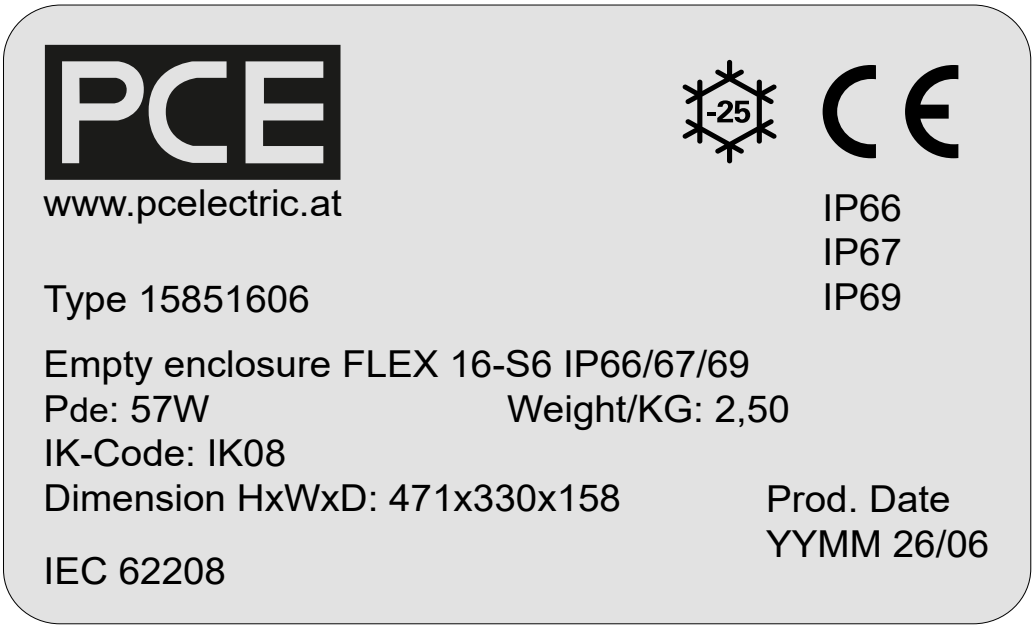

4. Technical data

Overall dimensions	6-E / 6-S3	10-E / 10-S4	16-E / 16-S6
Height (mm)	471	471	471
Width (mm)	160	230	330
Depth (mm)	132	158	158
Internal dimensions – protected space			
Height (mm)	461	461	461
Width (mm)	150	220	320
Depth (mm)	72	92	92
Load-bearing capacity (max. N)	100	100	100
Weight (kg)	1.4	1.9	2.5
Power dissipation capacity P_{de} (W)	33	44	57

Ambient temperature	-25° C to +40° C
Transportation and storage temperatures	-25° C to +55° C / briefly (24h) up to +70° C
Insulation temperature index	90°C (IEC 60085)
Humidity for indoor installation	5% to 95% at-5°C to +30°C 5% to 70% at-5°C to +35°C 5% to 57% at-5°C to +40°C
Humidity for outdoor installation	15% to 100% at-25°C to +30°C 15% to 60% at-25°C to +35°C 15% to 46% at-25°C to +40°C
IP protection class	IP66/IP67/IP69
IK protection rating	IK08
Degree of contamination	3
Rated insulation voltage	690 V
Maximum installation height over sea level	2000 m
Glow-wire resistance as per IEC/EN 60695-2-11	650° C

The listed technical data applies only to the intended use of the FLEX empty enclosure.

4.1 FLEX empty enclosure insulating material

The FLEX empty enclosure is made of insulating ABS (acrylonitrile butadiene styrene) material. The hinged window is made of PC (polycarbonate).

4.2 Degrees of protection

IP protection class
With the hinged window closed, the FLEX empty enclosure has an IP protection class of **IP66/IP67/IP69**.

> If the product is installed correctly with the supplied screw covers for covering the wall mounting screws, the original IP protection class of IP66/IP67/IP69 is ensured for the entire FLEX empty enclosure.

IK protection rating

The FLEX empty enclosure has an IK protection rating of **IK08**. This corresponds to an impact energy of 5 Joule.

4.3 Special operating conditions

NOTICE

Seal damage possible!
If the product is used at temperatures below freezing point, the seals on the upper part of the enclosure and on the hinged window may freeze solid. The seal may then be damaged if the product is not opened carefully.
- Open the hinged window carefully
- Replace the FLEX empty enclosure with the damaged seals

NOTICE

Component damage due to condensation possible!
If the product is installed outdoors in an environment with fluctuating temperatures or high humidity, condensation may form inside the FLEX empty enclosure. To prevent this:
- Provide appropriate ventilation measures for the FLEX empty enclosure
- The manufacturer must take account of the necessary protection class when selecting the measures

4.4 Chemical compatibility

The resistance specifications apply at room temperature, but resistance levels may vary in cases where different media meet.

No liability is assumed for the correctness of this information. The specifications do not exempt users from conducting their own inspections and tests to determine the actual suitability of the products for the intended application.

Chemicals	Concentration	Resistance* PC	ABS
Acetone		-	-
Aldehydes		-	o /-
Alcohols		o	+ / o
Formic acid	4–5%	-	+
Amines		-	+
Ammonia	5%	-	+
Inorganic salts		+ / o	+
Benzine		o /-	o /-
Benzene		-	-
Chlorine		o	-
Acetic acid	5%	+	+
Esters		o	-
Ethyl ethers		-	-
Fats		+	+
Hydrofluoric acid		x	+
Formaldehyde	5%	-	+
Glycol		o	x
Glycerine		o	+
Ketones		-	-
Fuels		o	+
Methane		+	+
Mineral oils		+	+
Sodium hydroxide	10%	-	+
Soda lye	2–8%	-	+
Nitrobenzene		-	x
Oils		+	+
Propanol		+	+
Nitric acid	2%	+	-
Hydrochloric acid	2%	o	o
Sulphuric acid	50%	+	+
Water, seawater, cold		+	+
Water, hot		o	+
Hydrogen peroxide		+	+
Citric acid	10%	+	+

+ resistant **o** conditionally resistant **-** not resistant **x** not specified

5. Product overview

5.1 Product description

The FLEX empty enclosure is a distribution box made of insulating material.
The FLEX empty enclosure consists of a lower part and an upper part. The enclosure upper part has a hinged window. The installation area for switchgear on a mounting rail is behind the hinged window. The mounting rail is preassembled on the enclosure lower part.

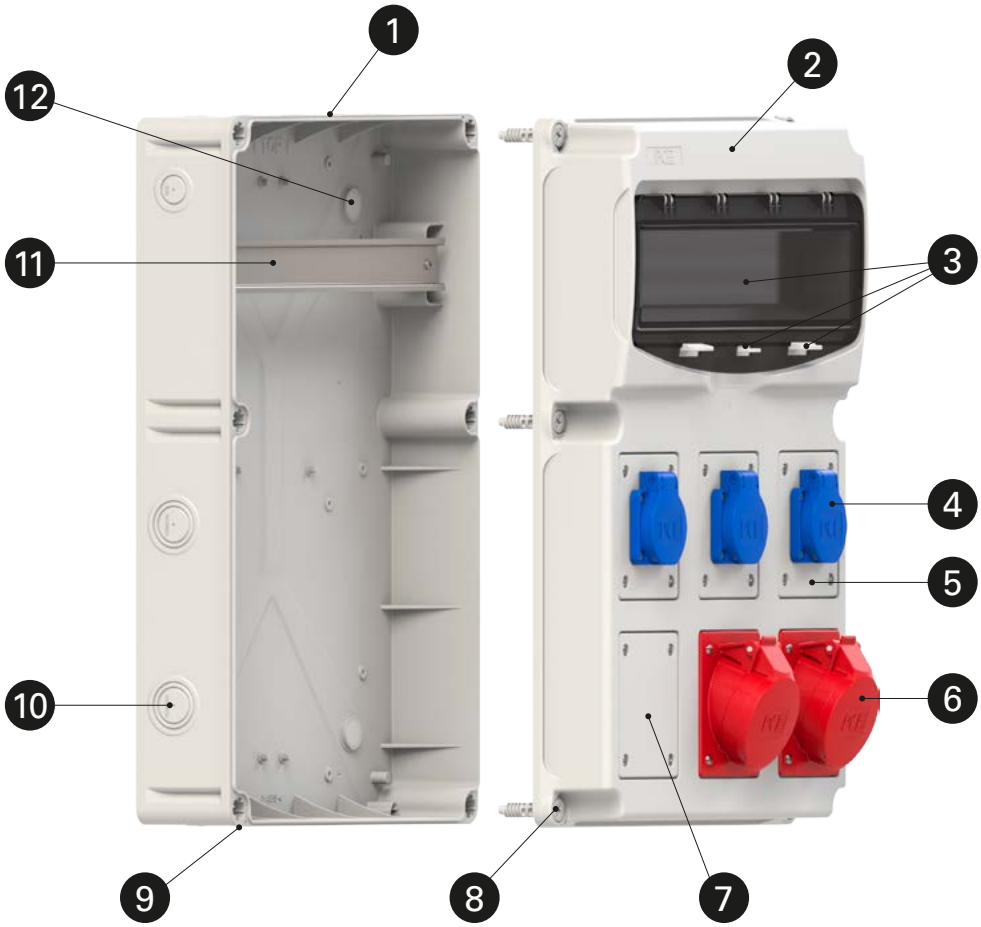

Model FLEX 16-S6

1. Enclosure lower part
2. Enclosure upper part
3. Hinged window with snap catch and locking device
4. Flanged socket outlet (DIN 49440) with earth contact (optional)
5. Flange adapter 50x50 (optional)
6. CEE flanged socket (optional)
7. Blind flange
8. Plastic enclosure screw (6x)
9. Opening for lead sealing Ø 2 mm
10. Drilling mark for cable glands
11. Mounting rail TH35-7.5
12. Screw cover (4x)

The different equipment versions are designated by the name extension "E" or "S".
On the "E" models, the enclosure upper part is sealed. "S" models feature cut-outs for installing flange adapters, blind flanges and/or flanged sockets.

5.2 Model overview

	FLEX 6-E	FLEX 10-E	FLEX 16-E
Max. no of subunits	6 SU	10 SU	16 SU
Openings for flanged sockets	–	–	–
Part number	**15850600**	**15851000**	**15851600**

Table: "E" model overview

	FLEX 6-S3	FLEX 10-S4	FLEX 16-S6
Max. no of subunits	6 SU	10 SU	16 SU
Openings for flanged sockets	3	4	6
Part number	**15850603**	**15851004**	**15851606**

Table: "S" model overview

5.3 Dimensional sketch FLEX 6-E/6-S3

Front view

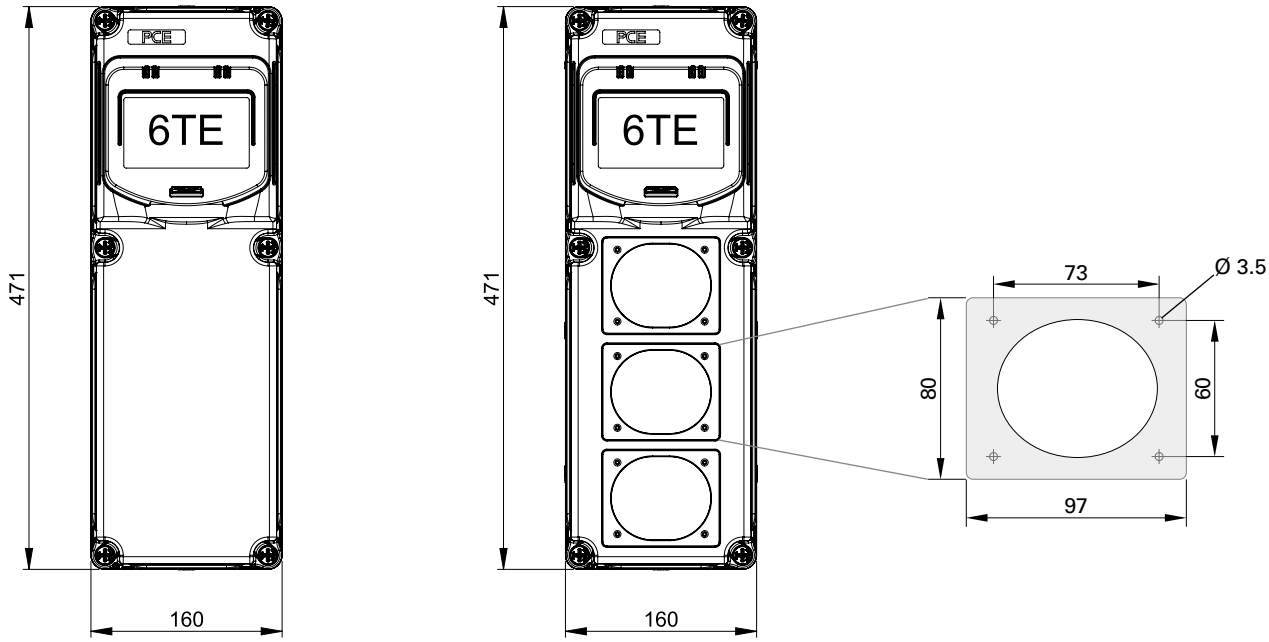

Rear view

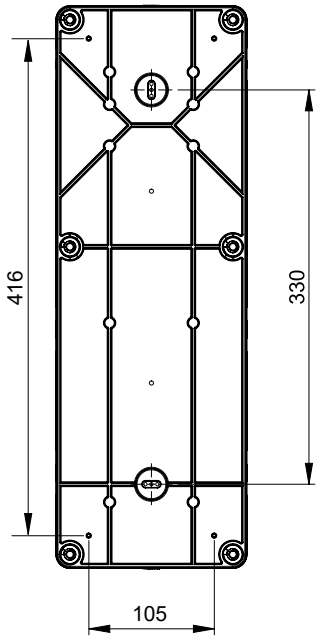

Side view

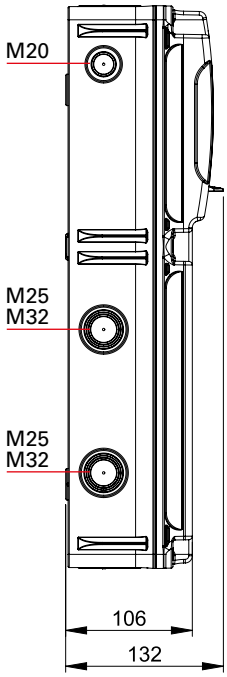

Top view

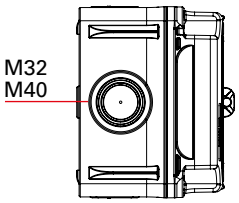

5.4 Dimensional sketch FLEX 10-E/10-S4

Front view

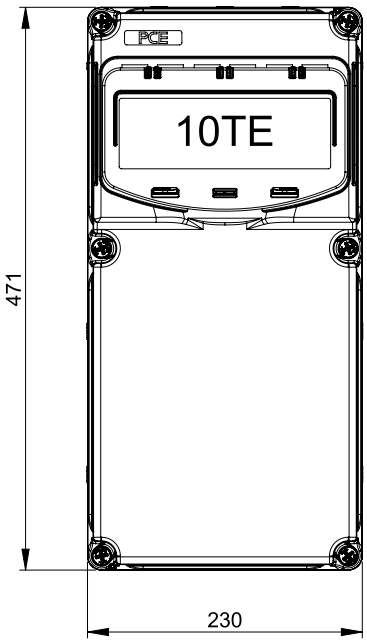

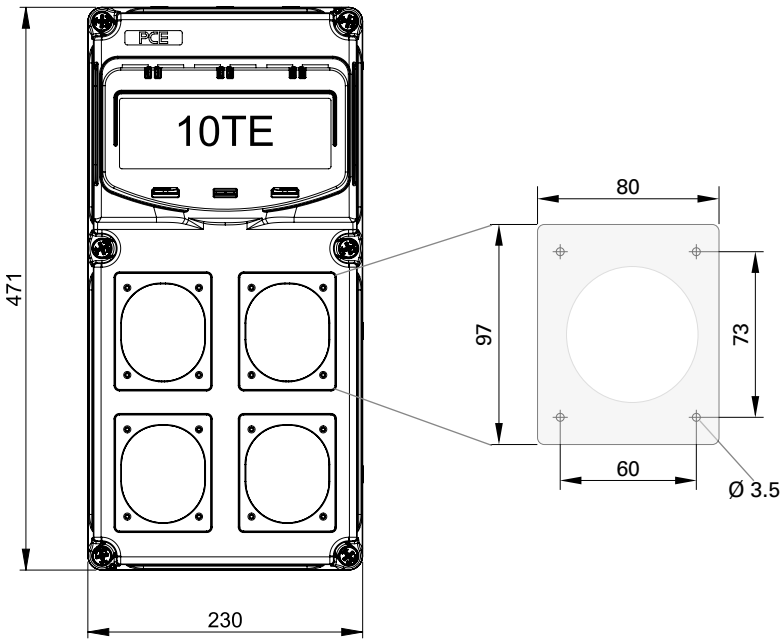

Rear view

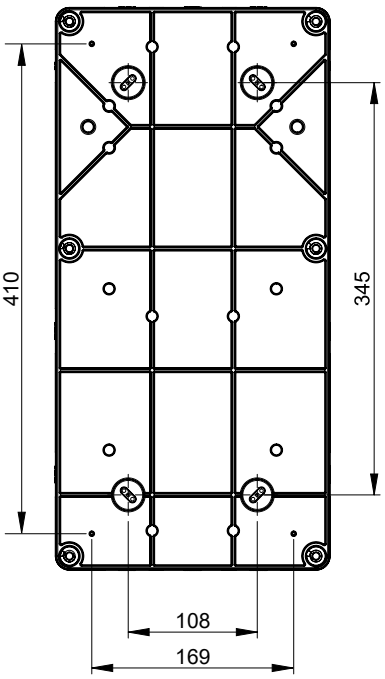

Side view

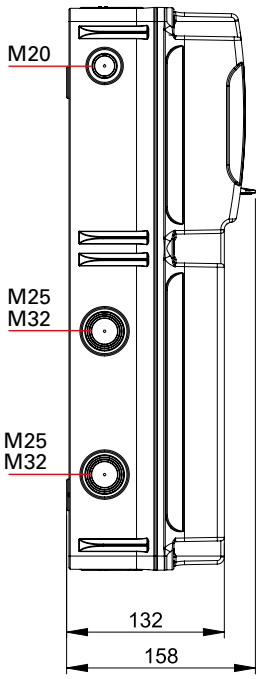

Top view

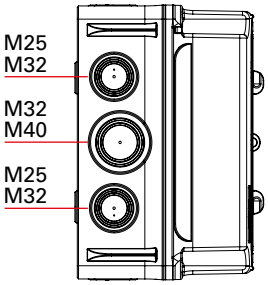

5.5 Dimensional sketch FLEX 16-E/16-S6

Front view

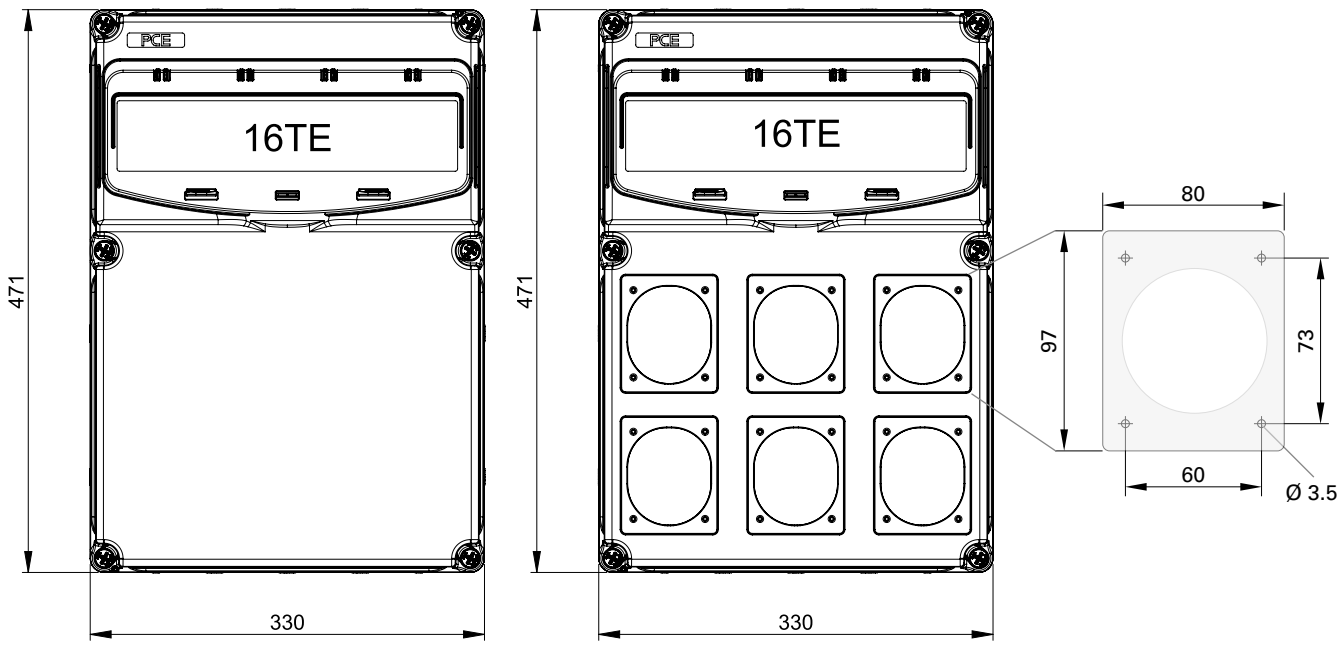

Rear view

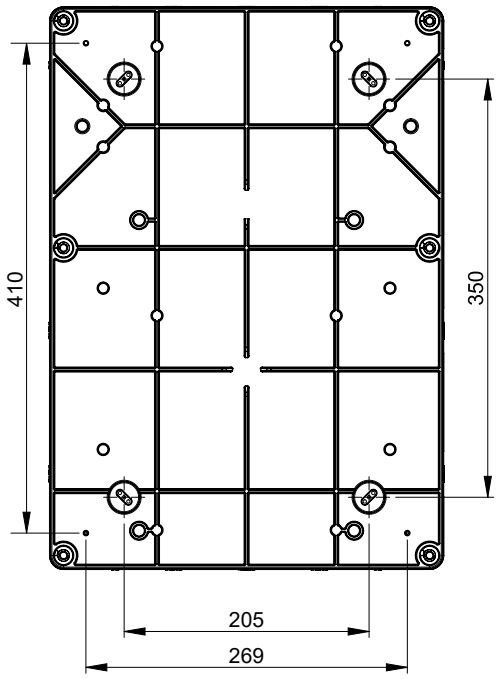

Side view

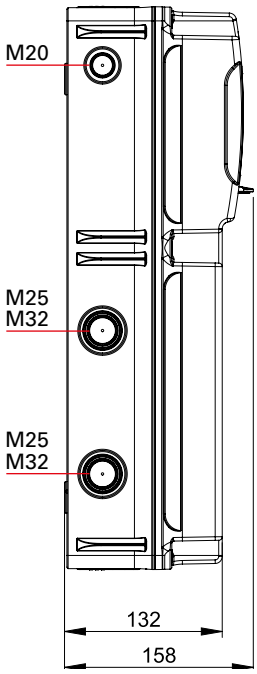

Top view

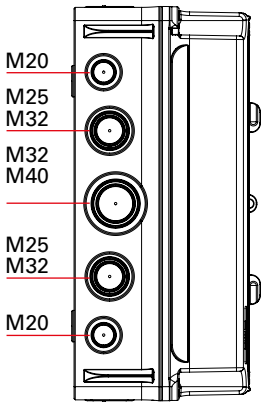

6. Package contents

FLEX 6-E

		Quantity
1.1	Enclosure lower part with fitted mounting rail	1
2.1	Enclosure upper part with fitted hinged window and captive enclosure screws	1
3	Quick reference guide	1
4	Hinge strap	2
5	Pan-head screw DIN 7981 4.8x13	4
6	Screw cover	2

FLEX 10-E

		Quantity
1.2	Enclosure lower part with fitted mounting rail	1
2.2	Enclosure upper part with fitted hinged window and captive enclosure screws	1
3	Quick reference guide	1
4	Hinge strap	2
5	Pan-head screw DIN 7981 4.8x13	4
6	Screw cover	4

FLEX 16-E

		Quantity
1.3	Enclosure with fitted mounting rail	1
2.3	Enclosure upper part with fitted window and captive enclosure screws	1
3	Quick reference guide	1
4	Hinge strap	2
5	Pan-head screw DIN 7981 4.8x13	4
6	Screw cover	4

3

4

5

6

FLEX 6-S3

		Quantity
1.4	Enclosure lower part with fitted mounting rail	1
2.4	Enclosure upper part with fitted hinged window and captive enclosure screws	1
3	Quick reference guide	1
4	Hinge strap	2
5	Pan-head screw DIN 7981 4.8x13	4
6	Screw cover	2
7	Blind flange	1
8	Flange gasket 97x80mm	1
9	Pan-head screw DIN 7981 4.2x16	12

FLEX 10-S4

		Quantity
1.5	Enclosure lower part with fitted mounting rail	1
2.5	Enclosure upper part with fitted hinged window and captive enclosure screws	1
3	Quick reference guide	1
4	Hinge strap	2
5	Pan-head screw DIN 7981 4.8x13	4
6	Screw cover	4
7	Blind flange	1
8	Flange gasket 97x80mm	1
9	Pan-head screw DIN 7981 4.2x16	16

FLEX 16-S6

		Quantity
1.6	Enclosure lower part with fitted mounting rail	1
2.6	Enclosure upper part with fitted hinged window and captive enclosure screws	1
3	Quick reference guide	1
4	Hinge strap	2
5	Pan-head screw DIN 7981 4.8x13	4
6	Screw cover	4
7	Blind flange	1
8	Flange gasket 97x80mm	1
9	Pan-head screw DIN 7981 4.2x16	24

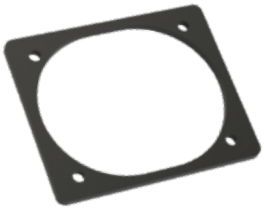

7. Installation instructions

This recommended installation procedure describes assembling the FLEX empty enclosure, without electrical installation, using the example of model FLEX 16-S6.

7.1 Drill openings for cable glands

- Use a drill to drill out the openings for cable glands at the intended positions

Observe the relevant manufacturers' installation instructions for cable glands

NOTICE

Cable gland openings are not designed to be broken out.

7.2 Mount FLEX empty enclosure on wall

The permissible operating positions of the equipment must be adhered to in order to ensure the required degree of protection.

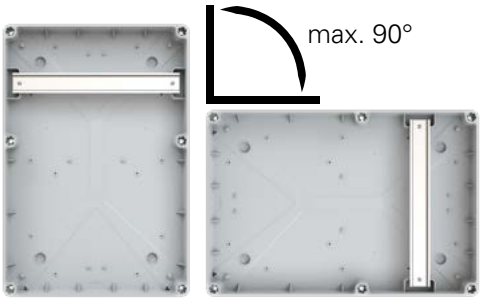

- Protection class IP44 and IP44/54 – wall mounting, vertical, with "TOP" marking at top. Wall mounting with "TOP" marking at side – max. angle 90° (see figure)
- Protection class IP66/67 – portable, no restriction of mounting position

Models FLEX 16-E/16-S6 – portable on metal supports, free-standing, "TOP" marking at top.

- Use a drill to drill out the mounting holes on the back of the FLEX empty enclosure

- Position the enclosure lower part vertically on the flat wall. At the same time, ensure that the "TOP" marking is at the top
- Securely fasten the enclosure lower part using suitable screws

- Cap the mounting holes with the supplied screw covers

There are only two screw covers on the FLEX 6-E/6-S3 models.

7.3 Fit hinge straps (2x)

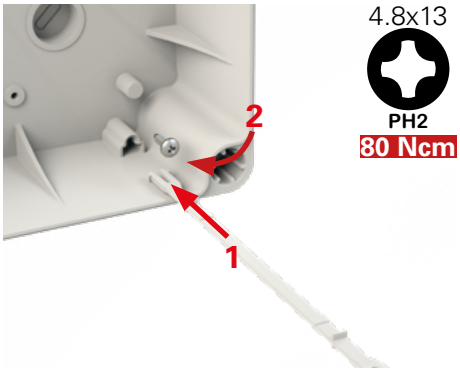

- Step 1: Insert each hinge strap at the bottom of the enclosure lower part and upper part
- Step 2: Secure with the screws (4.8x13)

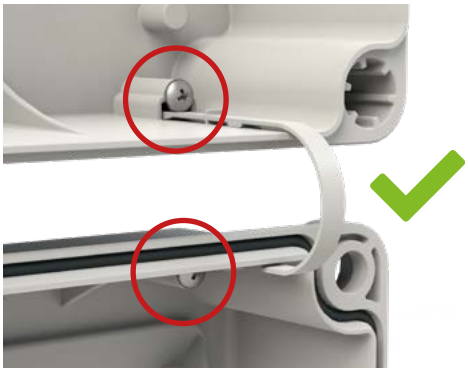

- The two hinge straps are fitted

7.4 Securely fasten enclose upper part and lower part

- Fold together enclose upper part and lower part
- Securely fasten enclose upper part to lower part

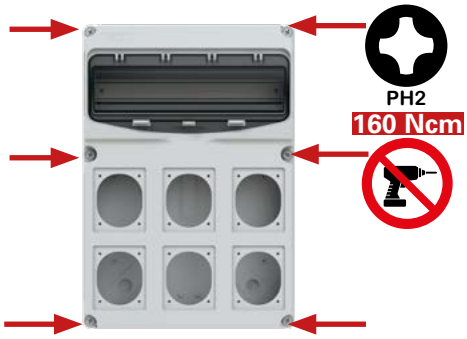

NOTICE

Use a PH2 or slot screwdriver with a blade width of 5.5–10 mm. Pay attention to the maximum tightening torque

Do not use an electric screwdriver.

7.5 Fit blind flange (optional)

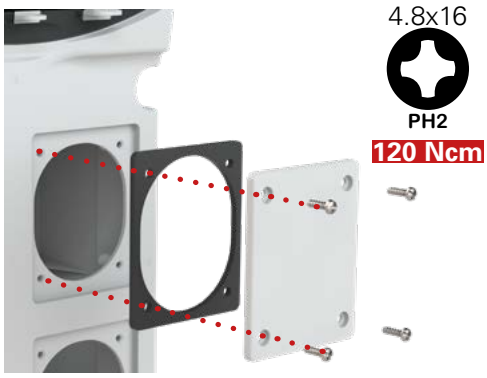

- Securely fasten blind flange and flange gasket with screws (4.2x16)

7.6 Fit CEE flanged socket (optional)

- Install flanged socket with screws (4.2x16) and flange gasket (80x97 mm)

7.7 Fit socket outlet (DIN 49440) (optional)

- Mount flange adapter 50x50 and flange gasket with screws (4.2x16)
- Mount socket outlet (DIN 49440) with screws (3.9x13)

Flange adapter, flange gasket, socket outlet (DIN 49440) and CEE flanged socket are available as accessories. See section "Accessories"

8. Operation

8.1 Open hinged window

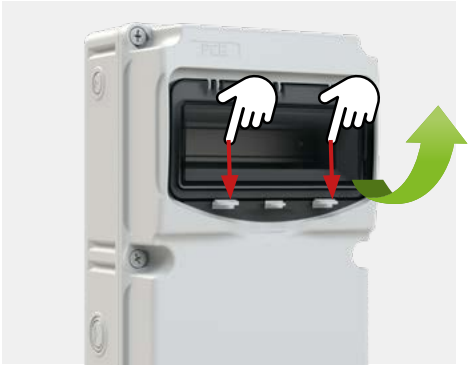

- Press the two catches down to open the hinged window

8.2 Close hinged window

- When closing the hinged window, both catches must latch completely into place ("CLICK" noise)

There is only one catch on the FLEX 6-E/6-S3 model.

The protection class of the FLEX empty enclosure is only guaranteed with the window completely closed.

8.3 Lock hinged window (optional)

- The hinged window can be locked with a padlock. Hole diameter 7 mm

8.4 Seal FLEX empty enclosure (optional)

- Seal enclosure upper part and lower part at two enclosure corners with optional cable seal or pull-tight seal (max. Ø 2 mm)

8.5 Additional mounting options

In the enclosure lower part, there are additional mounting options for equipping the enclosure with accessories.

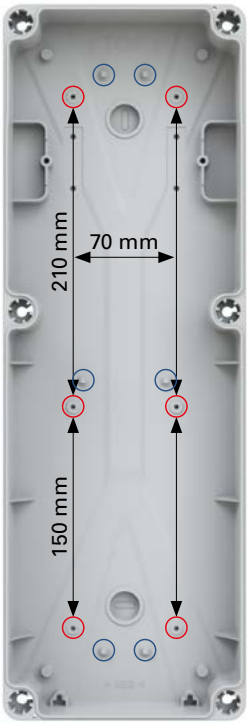

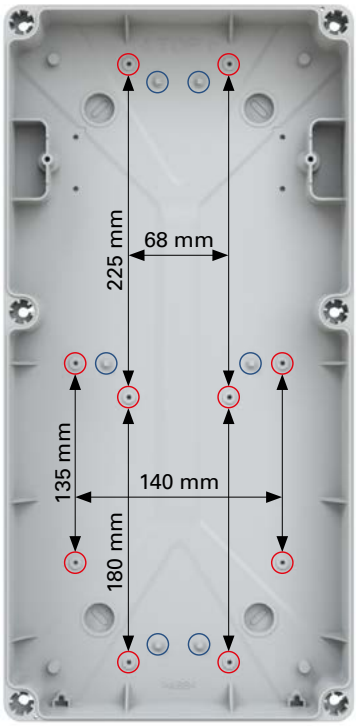

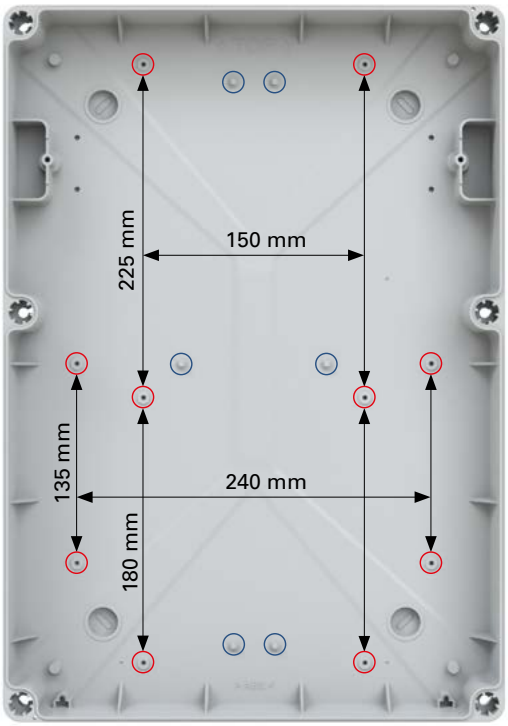

○ **Screw bosses**
Hole diameter 3 mm
Hole depth 8 mm

○ **Plugs**
for Vario Connector terminal strip system
(see "Accessories" section)

9. Dismantling and disposal

WARNING

Risk of injury due to improper decommissioning and dismantling!
Take the following safety steps before starting any work:

- Disconnect mains
- Secure against being switched on again
- Determine absence of voltage
- Earth and short circuit
- Cover or cordon off nearby live parts

At the end of its life cycle, the FLEX empty enclosure must be disposed of properly or sent for recycling.
The applicable national legal regulations and provisions of the country of use must be observed.
To simplify the recycling process, the plastic parts of the FLEX empty enclosure bear the relevant material marking (e.g. >ABS<).

Enclosure screws are made of the same materials as the enclosure lower part and upper part.

10. Accessories (optional)

Angled CEE flanged socket IP44/54

with screw terminals, brass contacts, flange 80x97 mm

		PU	Part no.			PU	Part no.
230V~	16 A 3-pin 6 h	10	**413-6f8**	**230V~**	32 A 3-pin 6 h	10	**423-6**
400V~	16 A 4-pin 6 h	10	**414-6f8**	**400V~**	32 A 4-pin 6 h	10	**424-6**
400V~	16 A 5-pin 6 h	10	**415-6**	**400V~**	32 A 5-pin 6 h	10	**425-6**

Angled CEE flanged socket IP66/67

with screw terminals, brass contacts, flange 80x97 mm

		PU	Part no.			PU	Part no.
230V~	16 A 3-pin 6 h	10	**4132-6f8**	**230V~**	32 A 3-pin 6 h	10	**4232-6f78**
400V~	16 A 4-pin 6 h	10	**4142-6f8**	**400V~**	32 A 4-pin 6 h	10	**4242-6f78**
400V~	16 A 5-pin 6 h	10	**4152-6f78**	**400V~**	32 A 5-pin 6 h	10	**4252-6f78**

Flanged socket outlet (DIN 49440) with earth contact IP54

P-NOVA PLUS

Flange 50x50 mm

Rear connection	PU	Part no.	Side connection	PU	Part no.
Austrian/German system	100	**1050-0b**	Austrian/German system	100	**1050-0bs**
French/Belgian system	100	**1040-0b**	French/Belgian system	100	**1040-0bs**

Flanged socket outlet (DIN 49440) with earth contact IP54 Flange 50x50 mm

S-NOVA®

Rear connection	PU	Part no.	Side connection	PU	Part no.
Austrian/German system	100	**105-0b**	Austrian/German system	100	**105-0bs**
French/Belgian system	100	**104-0b**	French/Belgian system	100	**104-0bs**

Flanged data socket IP54

Flange 50x50 mm

	PU	Part no.
incl. 2x CAT 6_A RJ45 module	1	**12k452-0e**
Empty flanged data socket with 1 opening	1	**11om-0e**
Plug-in module CAT 6_A RJ45 module	1	**093617**
Plug-in module USB 2.0 A / USB 2.0 A	1	**086317**

12k452-0e

Other accessories and technical data are listed in the PCE product catalogue: www.pcelectric.at

Blind flange **Part no. 158500**

Set comprising:

		PU*
1	Blind flange adapter	6
2	Flange gasket	6

PU*=packaging unit

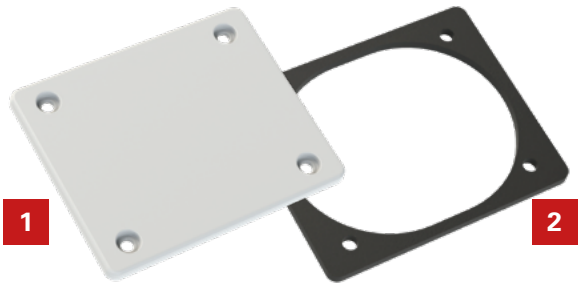

Flange adapter 50x50 **Part no. 158550**

Set comprising:

		PU
1	Flange adapter 50x50 mm	6
2	Flange gasket	6
3	Pan-head screw DIN 7983 3.9x16 for installing the socket outlet (DIN 49440)	24

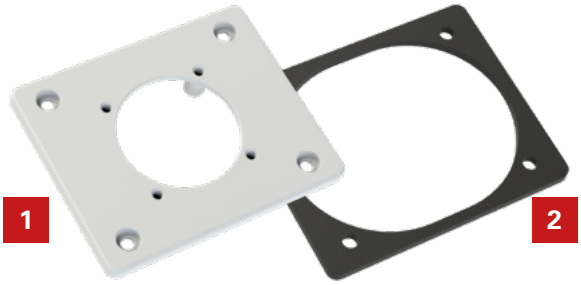

Vario Connector

variable terminal strip system
for use as a connecting or intermediate terminal

		PU
1	**Vario Connector 2x6p** **Part no. 667119-2/6**	200
2	**Vario Connector 2x9p** **Part no. 667119-2/9**	200
3	**Vario Connector 5x3p** **Part no. 667119-5/3**	200

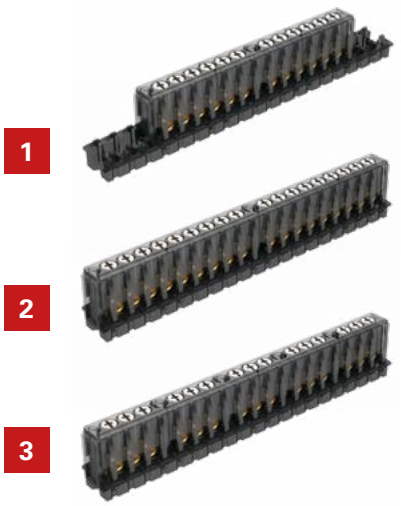

Carrying handle **Part no. 158502**

Set comprising:

		PU
1	Carrying handle	1
2	Screws DIN 7983 4.8x32	2
3	Cap nuts WAF* 10 (insulated)	2

WAF*=width across flats

Handle installation

Drill holes (Ø 5 mm / spacing 122 mm) at the marks and fit the carrying handle using screws and insulated cap nuts

FLEX 10-E/10-S4

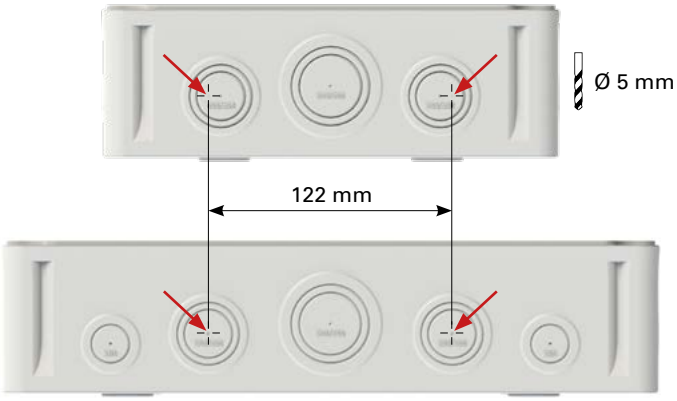

FLEX 16-E/16-S6

The carrying handle is only suitable for FLEX 10-E/10-S4 and FLEX 16-E/16-S6 models.

Folding stand **Part no. 598053**

only for FLEX 16-E/16-S6

Mounting kit for folding stand

Part no. 158503

comprising:

		Quantity
1	Screws DIN 7981 4.8x25	4
2	Cap nuts WAF* 10 (insulated)	4

WAF*=width across flats

1

2

When used with a folding stand, FLEX empty enclosures meet the IP66 protection rating and can withstand a maximum load of 12.5 kg.

Fitting the folding stand

Drill mounting holes (Ø 5mm) at the marks (180x260 mm).

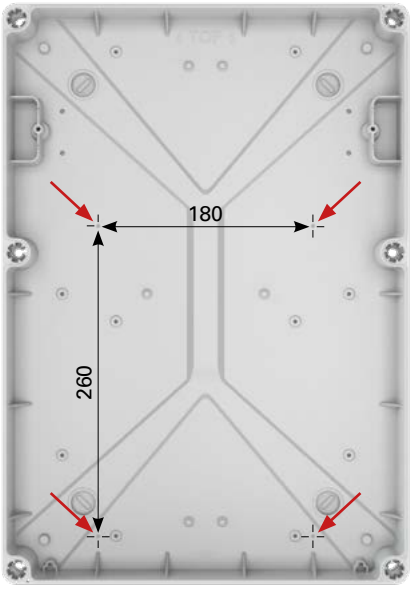

Ø 5 mm

4.2x25

PH2

120 Ncm

Cable glands IP66/68 plastic, light grey (RAL7035)

Size	Thread length (mm)	Cable dia. (mm)	Width across flats (mm)	PU (MOQ)	**Part no.**
M20x1.5	9	6-12	24	100	**23201509141**
M25x1.5	15	13-18	33	50	**23251511181**
M32x1.5*	15	18-25	42	25	**23321511211**
M40x1.5*	18	22-32	53	10	**23401513321**

*incl. flat gasket

Blind caps IP54 plastic, light grey (RAL7035)

Size	Thread length (mm)			PU (MOQ)	**Part no.**
M25x1.5	7			100	**2725151010**
M32x1.5	8			100	**273215101**
M40x1.5	9			100	**274015101**

Lock nut nickel-plated brass

Size	Height (mm)	Width across flats (mm)		PU (MOQ)	**Part no.**
M20x1.5	3	24		100	**262015009**
M25x1.5	3.5	29		100	**262515009**
M32x1.5	4	36		100	**263215009**
M40x1.5	4.5	46		50	**264015009**

Seal ring for connecting thread black rubber

Size	Height (mm)	OD (mm)	ID (mm)	PU (MOQ)	**Part no.**
M20	1	23.5	18.2	100	**410814**
M25	1	29.5	23.2	50	**410808**
M32	1	36.5	30.2	25	**410810**
M40	1	45.5	38.2	10	**410811**

Pressure screw plastic, light grey (RAL7035)

Size	Thread length (mm)	Width across flats (mm)	ID (mm)	PU (MOQ)	**Part no.**
M32x1.5	14.5	34	26	25	**0530**
M40x1.5	16	42	34	10	**0526**

Cover strip **Part no. 2119100**

Blind cover strip
6 subunits

PCE

Connection
to the future

www.pcelectric.at

PC Electric GesmbH

Diesseits 145

4973 St. Martin im Innkreis

AUSTRIA

TEL +43 7751 61220

FAX +43 7751 6969

office@pcelectric.at

Part no. 11206

Subject to technical changes.
Misprints and printing errors excepted.